NTS3915T06S8

N+P-Channel Enhancement Mode Trench Power MOSFET

Pb-Free RoHS COMPLIANT

Voltage: 60 Volts	**Current:** 7.5/-4.5 Amperes	**Package:** SOP-8

Features

- NH'S Advanced Trench Technology
- Low Rds(on) For Low On-State Loss
- High EAS For High Reliability
- Excellent Qg*Rds(on) Product(FOM）

Typical Applications

- DC-DC Converter
- Battery Management System(BMS)
- Printed Circuit Board For Control Circuit
- Uninterrupible Power Supplies(UPS)

Diagram:

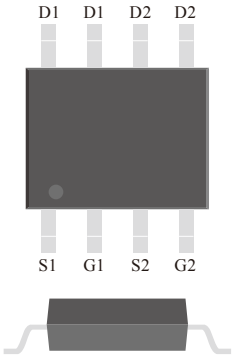

Polarity:

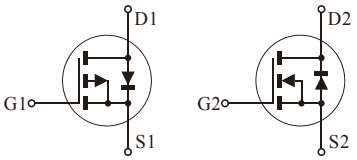

***100% UIS TESTED**

***100% ΔVDS TESTED**

Product Summary

Types of MOS	N	P	**Unit**
VDS Min.@T_j	60	-60	**V**
I_D Min.@Ta	7.5	-4.5	**A**
RDS(ON)(TYP)@10V	15	38.5	**mΩ**

Absolute Maximum Ratings (Ta=25℃ Unless Otherwise Specified)

Parameter	**Test Conditions**	**Symbol**	**Ratings**		**Unit**
Drain-Source Voltage		V_{DS}	60	-60	**V**
Gate-Source Voltage		V_{GS}	±20	±20	**V**
Continuous Drain Current (Note 1)	Ta= 25 ℃ Ta= 100 ℃	I_D	7.5 4.8	-4.5 -2.9	**A**
Drain Current-Pulse (Note 1)	T_J< 150 ℃	I_{DM}	30	-18	**A**
Maximum Power Dissipation Power Dissipation Derating Factor Above 25℃	Ta= 25 ℃ Ta= 100 ℃	P_D	1.9 0.8	1.9 0.8	W
Derating Factor		D_F	0.02	0.02	W/℃
Avalanche Current,Single Pulse (Note 1)	L= 0.5 mH	I_{AS}	14	-14	**A**
Single Pulse Avalanche Energy (Note 1) Test Circuit & Waveform See Fig.17	L= 0.5 mH IAS= 14 A,RG= 10.0 Ω Starting Tj=25 ℃,VG = 10.0 V	E_{AS}	49	49	**mJ**

Thermal Characteristcs (Ta=25℃ Unless Otherwise Specified)

Parameter	**Test Conditions**	**Symbol**	**Typ.**	**Unit**
Junction Temperature		T_J	-55 to 150	℃
Storage Temperature Range		T_{STD}	-55 to 150	℃
Thermal Resistance Junction To Ambient With Steady-State	Still Air Environment With Ta=25℃	$R_{\theta JA}$	65.5	℃/W

Notes: 1.Pulse Width Limited By Max. Junction Temperature. (See Fig.14)

NTS3915T06S8

N+P-Channel Enhancement Mode Trench Power MOSFET

Pb Pb-Free RoHS COMPLIANT

N-Electrical Characteristcs (Ta=25℃ Unless Otherwise Specified)

Parameter	Test Conditions	Symbol	Min.	Typ.	Max.	Unit
Static Off Characteristics						
Drain-Source Breakdown Voltage	VGS=0V,ID=250uA	BV_{DSS}	60	--	--	V
Bvdss Temperature Coefficient	ID=250uA,Reference25℃	$\Delta BV_{DSS}/\Delta T_J$	--	0.07	--	V/℃
Drain-Source Leakage Current	VDS= 60 V,VGS=0V	I_{DSS}	--	--	1	uA
Gate-Body Leakage Current	VGS= ±20 V,VDS=0V	I_{GSS}	--	--	±100	nA
Static On Characteristics						
Gate Threshold Voltage	VGS= VDS ID=250uA	$V_{GS(TH)}$	1	1.6	2.2	V
Drain-Source On Resistance	ID= 3.8 A,VGS= 10.0 V	$R_{DS(ON)}$	--	15	20	mΩ
	ID= 3.8 A,VGS= 5.0 V		--	22	30	
Dynamic Characteristics						
Input Capacitance	VDS= 30 V	C_{iss}	--	1540	--	pF
Output Capacitance	VGS= 0 V	C_{oss}	--	100	--	pF
Reverse Transfer Capacitance	F= 1 MHZ	C_{rss}	--	90	--	pF
Switching Paramters With Inductive Load(Test Circuit & Waveform See Fig.15)						
Turn-On Delay Time	VDS= 30 V	$t_{d(on)}$	--	7	--	ns
Turn-On Rise Time	VGS= 10.0 V	t_r	--	5	--	ns
Turn-Off Delay Time	RG= 10.0 Ω	$t_{d(off)}$	--	25	--	ns
Turn-Off Rise Time	L= 0.5 mH	t_f	--	5	--	ns
Gate Charge Paramters (Test Circuit & Waveform See Fig.16)						
Total Gate Charge	VDS= 30 V	Q_g	--	38	--	nC
Gate-Source Charge	VGS= 10.0 V	Q_{gs}	--	7	--	nC
Gate-Drain Charge	ID= 7.5 A	Q_{gd}	--	8	--	nC
Drain-Source Diode Characteristics And Maximum Ratings (Test Circuit & Waveform See Fig.18)						
Max. Diode Forward Current		I_S	--	--	7.5	A
Max. Pulsed Forward Current		I_{SM}	--	--	30	A
Diode Forward Voltage	ID= 3.8 A,VGS=0V	V_{SD}	--	0.7	1.2	V
Reverse Recovery Time	IS= 3.8 A,di/dt= 100 A/us	t_{rr}	--	25	--	ns
Reverse Recovery Charge	VGS= 0.0 V	Q_{rr}	--	35	--	nC
Reverse Recovery Current		I_{RRM}	--	3.0	--	A

NTS3915T06S8

N+P-Channel Enhancement Mode Trench Power MOSFET

Pb Pb-Free RoHS COMPLIANT

P-Electrical Characteristcs (Ta=25℃ Unless Otherwise Specified)

Parameter	Test Conditions	Symbol	Min.	Typ.	Max.	Unit
Static Off Characteristics						
Drain-Source Breakdown Voltage	VGS=0V,ID=250uA	BV_{DSS}	-60	--	--	V
Bvdss Temperature Coefficient	ID=250uA,Reference25℃	$\Delta BV_{DSS}/\Delta T_J$	--	0.07	--	V/℃
Drain-Source Leakage Current	VDS= -60 V,VGS=0V	I_{DSS}	--	--	-1	uA
Gate-Body Leakage Current	VGS= ±20 V,VDS=0V	I_{GSS}	--	--	±100	nA
Static On Characteristics						
Gate Threshold Voltage	VGS= VDS ID=-250uA	$V_{GS(TH)}$	-1	-1.6	-2.2	V
Drain-Source On Resistance	ID= -2.3 A,VGS= -10.0 V ID= -2.3 A,VGS= -5.0 V	$R_{DS(ON)}$	-- --	38.5 55.8	50 75	mΩ
Dynamic Characteristics						
Input Capacitance	VDS= -30 V VGS= 0 V F= 1 MHZ	C_{iss}	--	2230	--	pF
Output Capacitance		C_{oss}	--	105	--	pF
Reverse Transfer Capacitance		C_{rss}	--	85	--	pF
Switching Paramters With Inductive Load(Test Circuit & Waveform See Fig.33)						
Turn-On Delay Time	VDS= -30 V VGS= -10.0 V RG= 10.0 Ω L= 0.5 mH	$t_{d(on)}$	--	12	--	ns
Turn-On Rise Time		t_r	--	14	--	ns
Turn-Off Delay Time		$t_{d(off)}$	--	35	--	ns
Turn-Off Rise Time		t_f	--	10	--	ns
Gate Charge Paramters (Test Circuit & Waveform See Fig.34)						
Total Gate Charge	VDS= -30 V VGS= -10.0 V ID= -4.5 A	Q_g	--	40	--	nC
Gate-Source Charge		Q_{gs}	--	9	--	nC
Gate-Drain Charge		Q_{gd}	--	10	--	nC
Drain-Source Diode Characteristics And Maximum Ratings (Test Circuit & Waveform See Fig.36)						
Max. Diode Forward Current		I_S	--	--	-4.5	A
Max. Pulsed Forward Current		I_{SM}	--	--	-18	A
Diode Forward Voltage	ID= -2.3 A,VGS=0V	V_{SD}	--	-0.7	-1.2	V
Reverse Recovery Time	IS= -2.3 A,di/dt= -100 A/us VGS= 0.0 V	t_{rr}	--	35	--	ns
Reverse Recovery Charge		Q_{rr}	--	62	--	nC
Reverse Recovery Current		I_{RRM}	--	-4.0	--	A

NTS3915T06S8

N+P-Channel Enhancement Mode Trench Power MOSFET

Pb-Free RoHS COMPLIANT

N-Typical Characteristics Curves

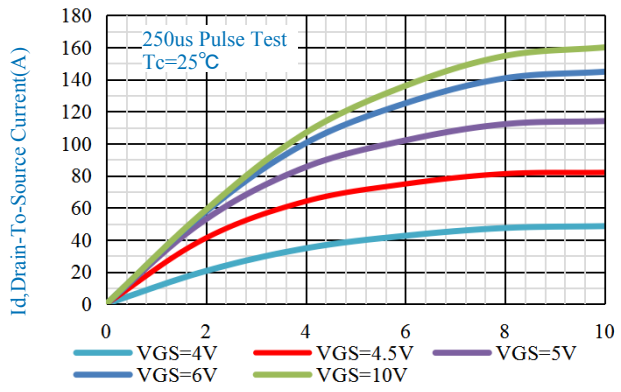

Fig.1-Output Characteristic

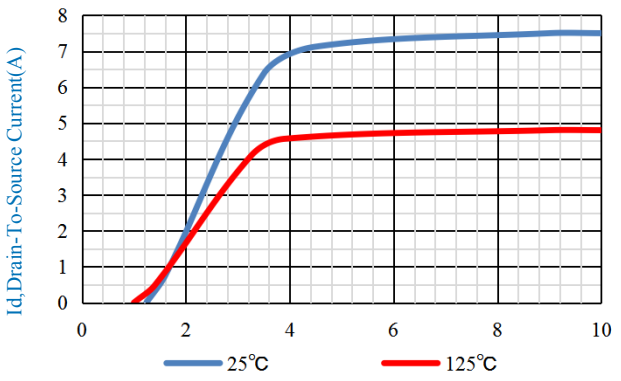

Fig.2-Transfer Characteristic

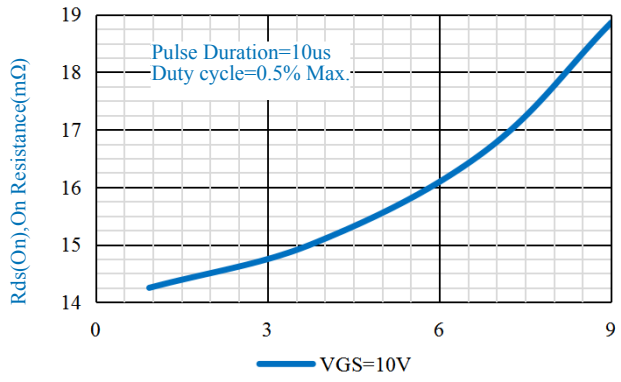

Fig.3-On Resistance Vs. Drain Current

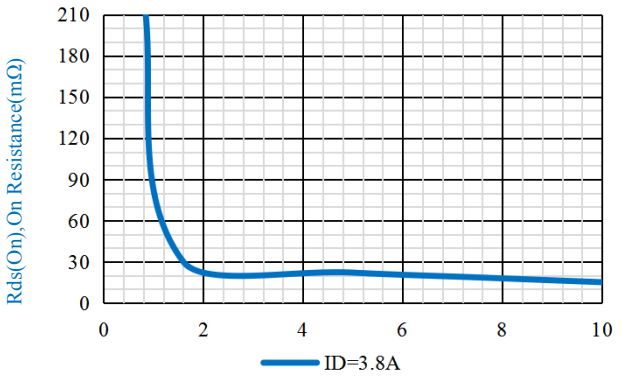

Fig.4-On Resistance Vs. Gate Source Voltage

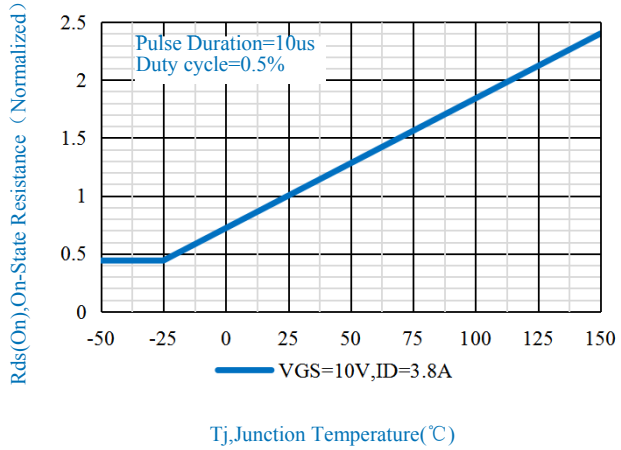

Fig.5-On Resistance Vs. Junction Temperature

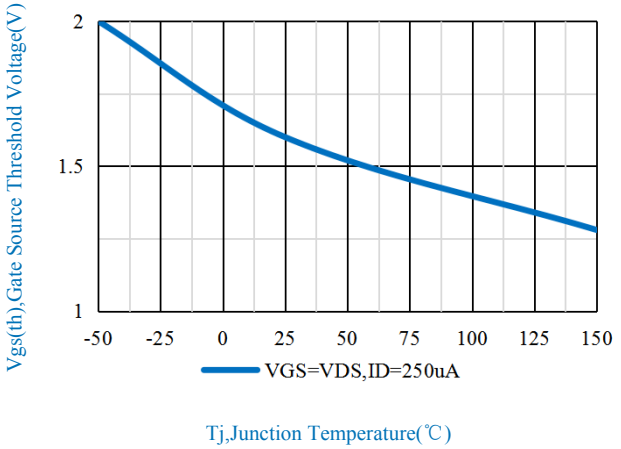

Fig.6-Gate Source Threshold Voltage Vs. Junction Temperature

NTS3915T06S8

N+P-Channel Enhancement Mode Trench Power MOSFET

Pb-Free RoHS COMPLIANT

N-Typical Characteristics Curves

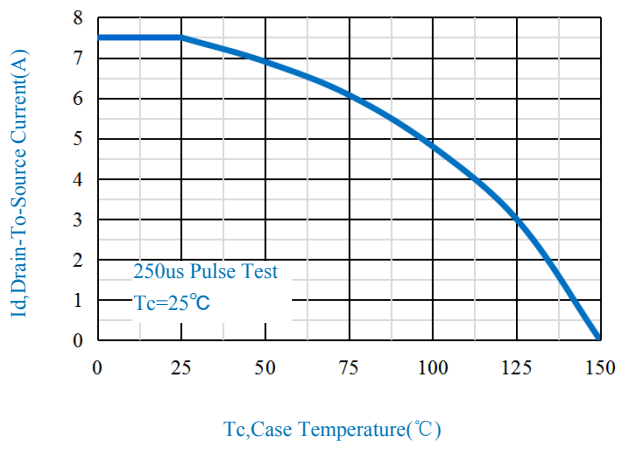

Fig.7-Maximum Continuous Drain Current Vs. Case Temperature

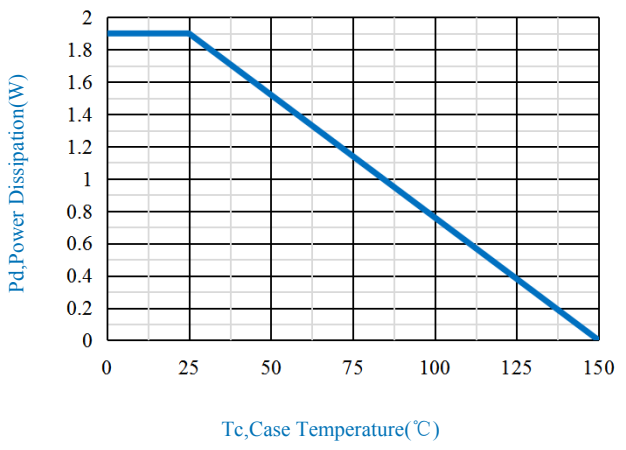

Fig.8-Maximum Power Dissipation Vs. Case Temperature

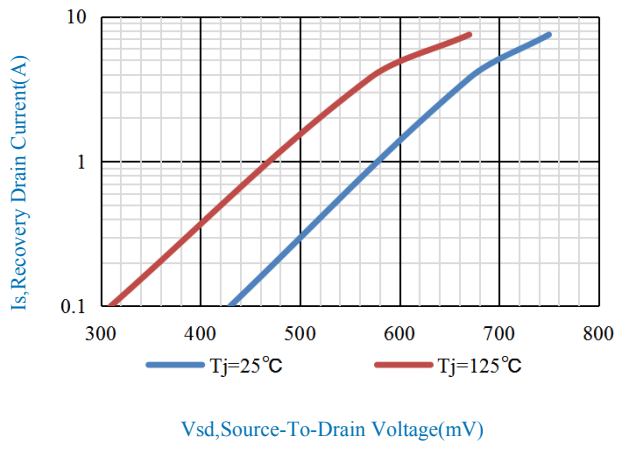

Fig.9-Source-To-Drain Diode Forward Voltage

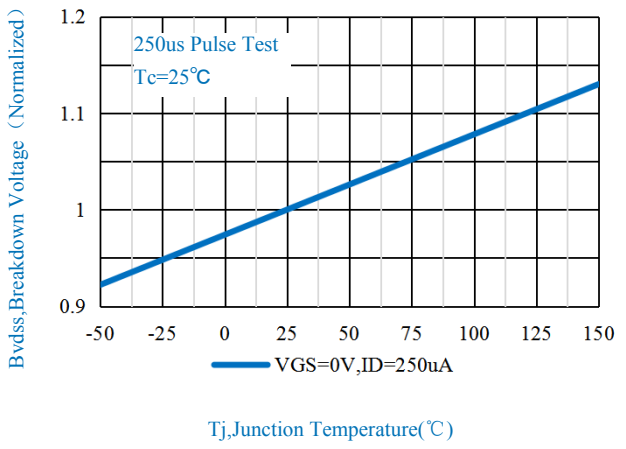

Fig.10-Breakdown Voltage Vs. Junction Temperature

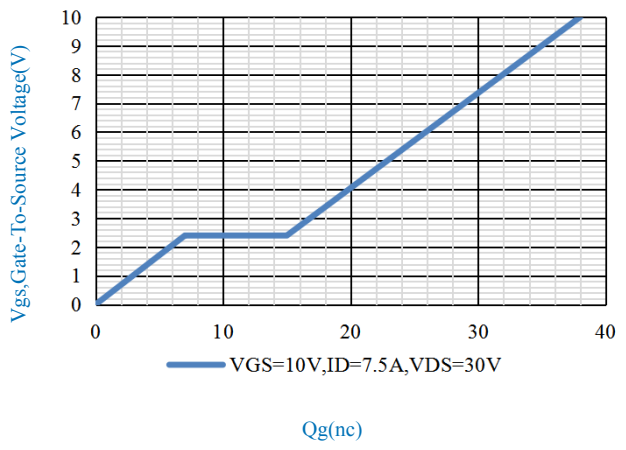

Fig.11-Gate Charge Waveform

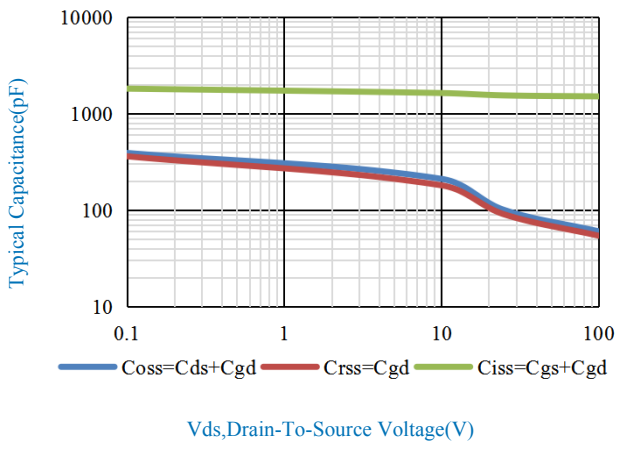

Fig.12-Typical Capacitance Vs. Drain-To-Source Voltage

NTS3915T06S8

N+P-Channel Enhancement Mode Trench Power MOSFET

Pb-Free RoHS COMPLIANT

N-Typical Characteristics Curves

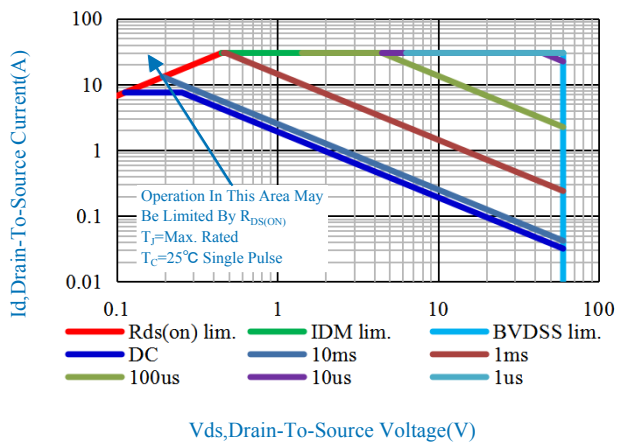

Fig.13-Maximum Safe Operating Area(SOA)

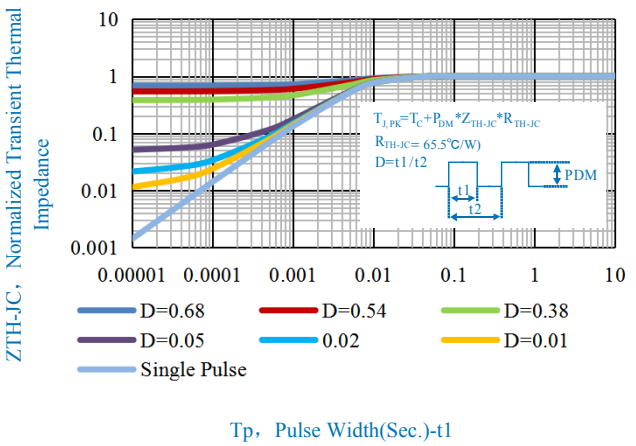

Fig.14- Normalized Maximum Transient Thermal Impedance Vs.Pulse Width

Inductive Load Test Circuit & Waveform

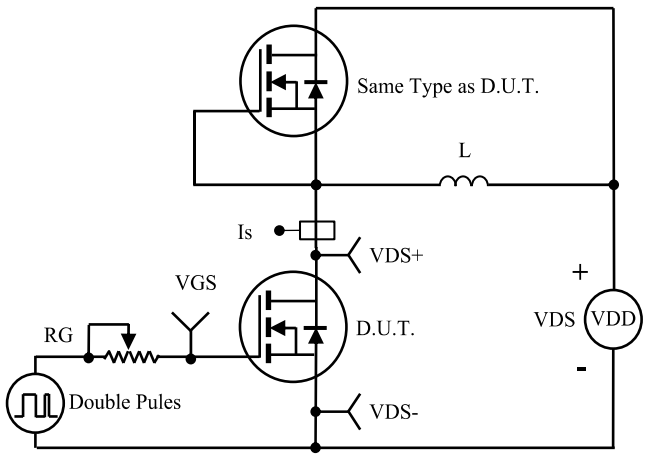

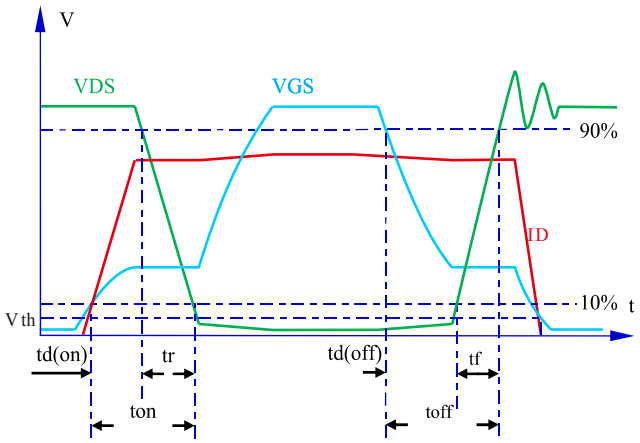

Fig.15- Inductive Switching Test Circuit & Waveform

NTS3915T06S8

N+P-Channel Enhancement Mode Trench Power MOSFET

Pb-Free RoHS COMPLIANT

N-Test Circuit & Waveform

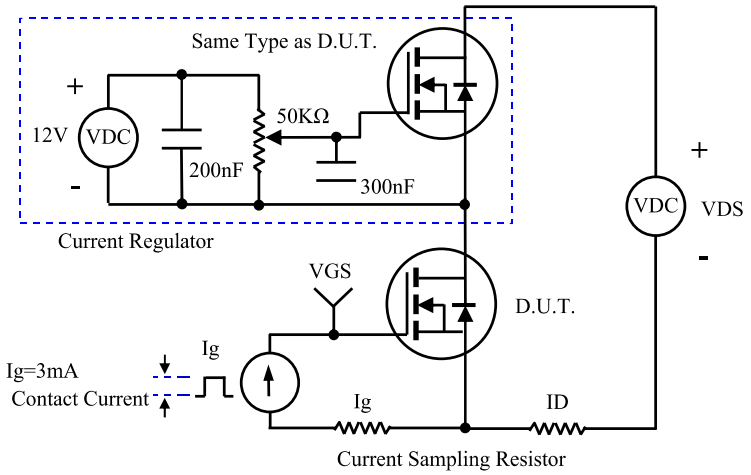

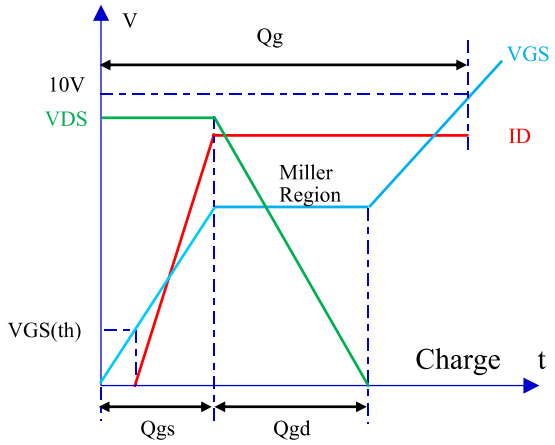

Fig.16-Gate Charge Test Circuit & Waveform

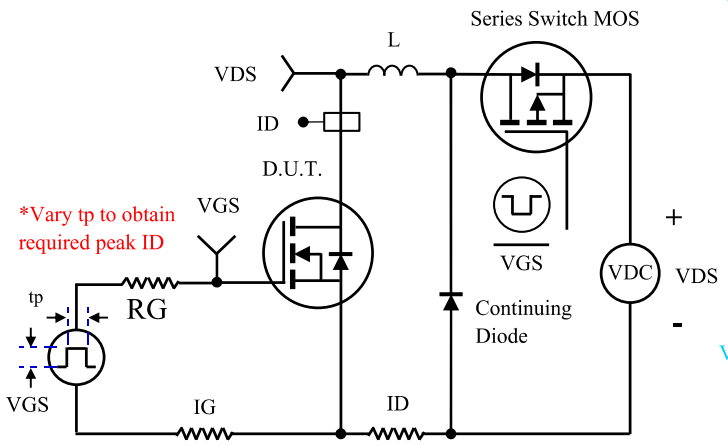

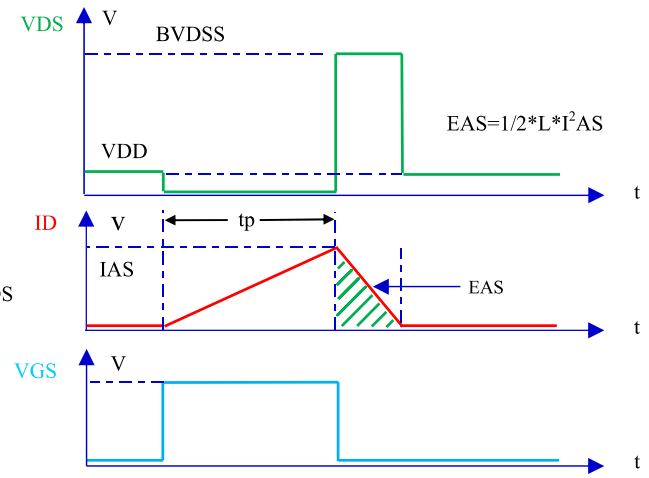

Fig.17- Unclamped Inductive Switching (UIS) Test Circuit & Waveform

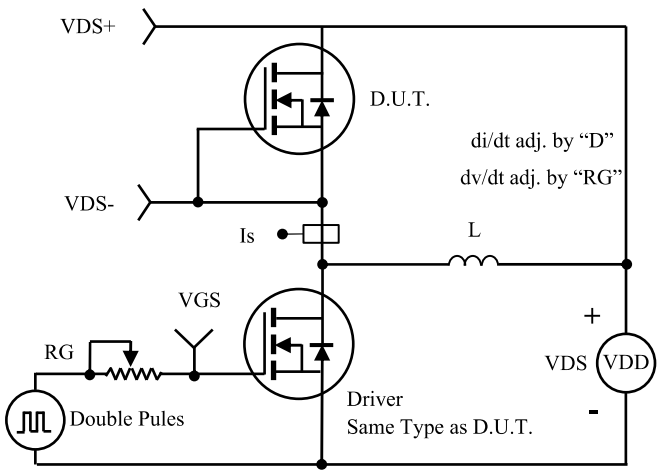

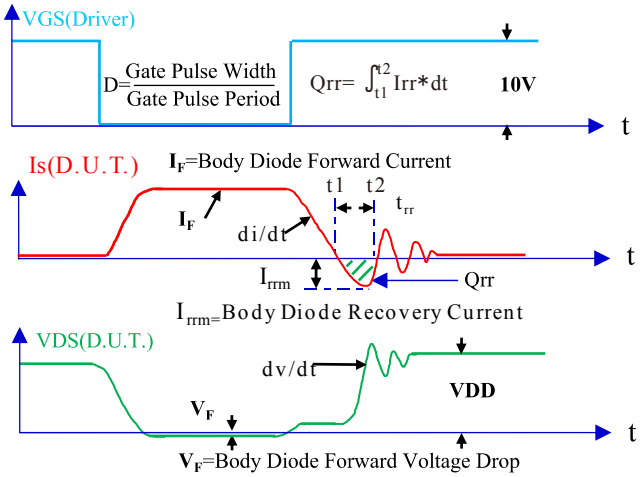

Fig.18- Diode Recovery Test Circuit & Waveform

NTS3915T06S8

N+P-Channel Enhancement Mode Trench Power MOSFET

Pb-Free RoHS COMPLIANT

P-Typical Characteristics Curves

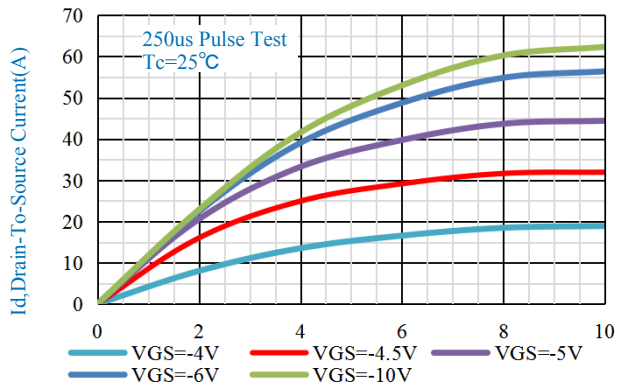

Fig.19-Output Characteristic

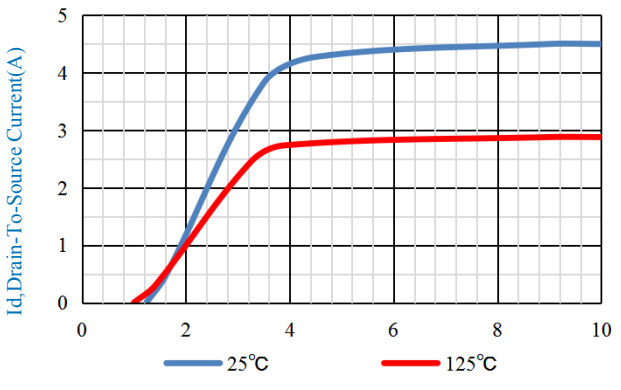

Fig.20-Transfer Characteristic

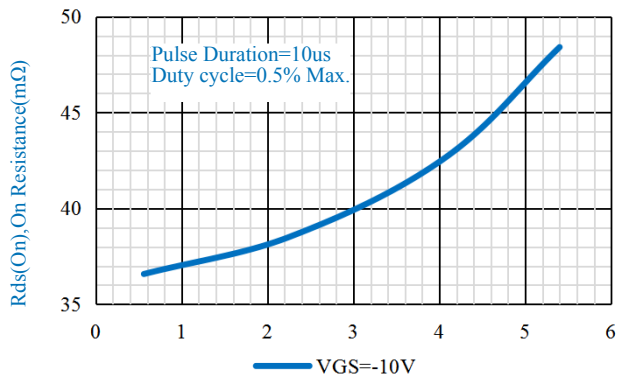

Fig.21-On Resistance Vs. Drain Current

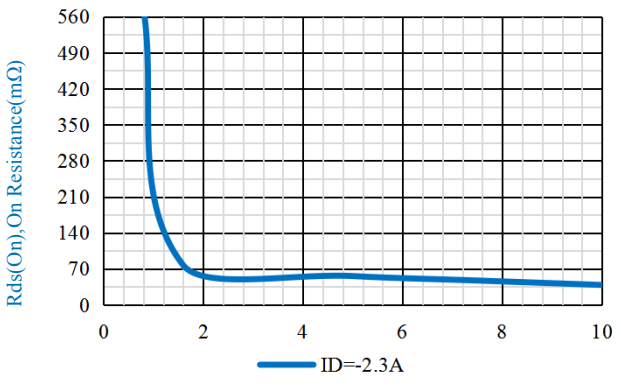

Fig.22-On Resistance Vs. Gate Source Voltage

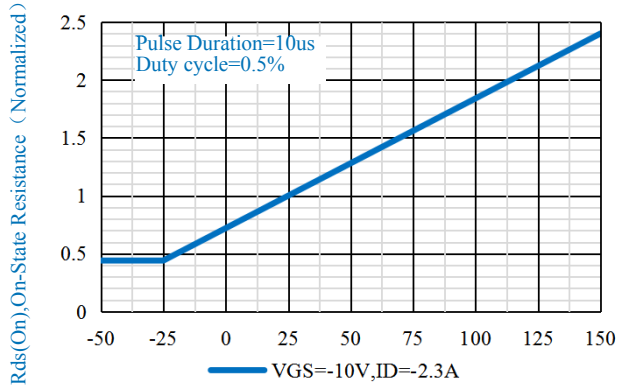

Fig.23-On Resistance Vs. Junction Temperature

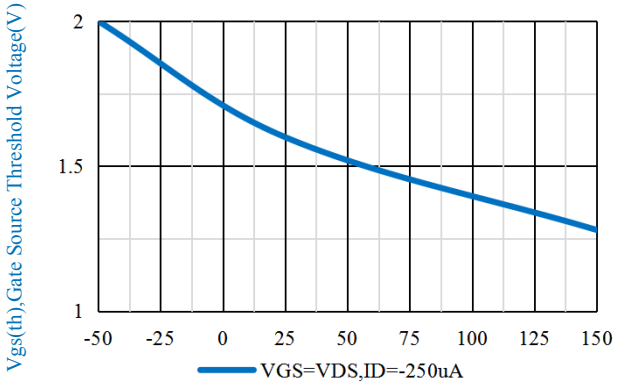

Fig.24-Gate Source Threshold Voltage Vs. Junction Temperature

NTS3915T06S8

N+P-Channel Enhancement Mode Trench Power MOSFET

Pb Pb-Free RoHS COMPLIANT

P-Typical Characteristics Curves

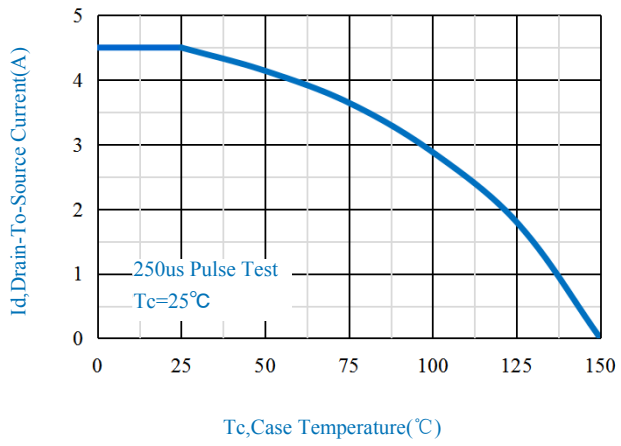

Fig.25-Maximum Continuous Drain Current Vs. Case Temperature

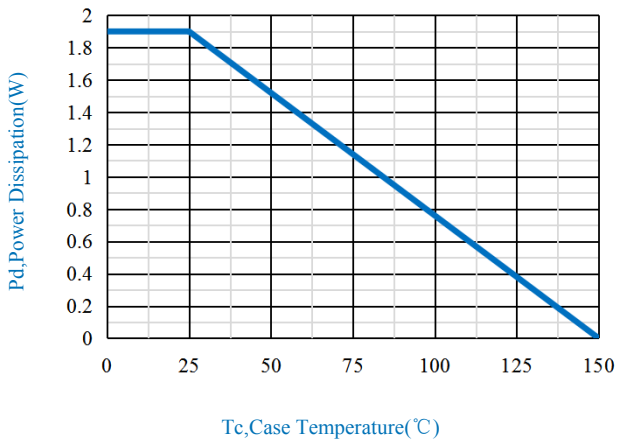

Fig.26-Maximum Power Dissipation Vs. Case Temperature

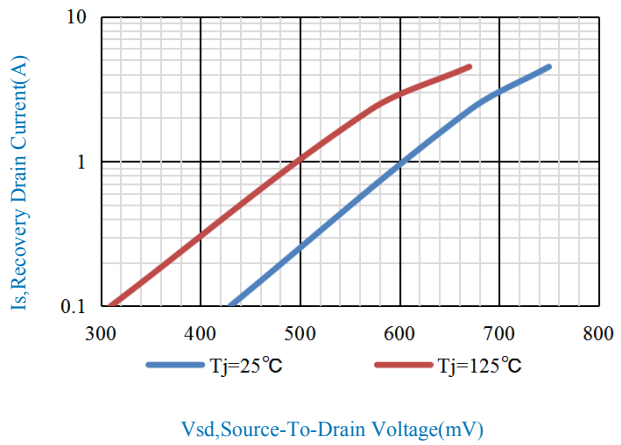

Fig.27-Source-To-Drain Diode Forward Voltage

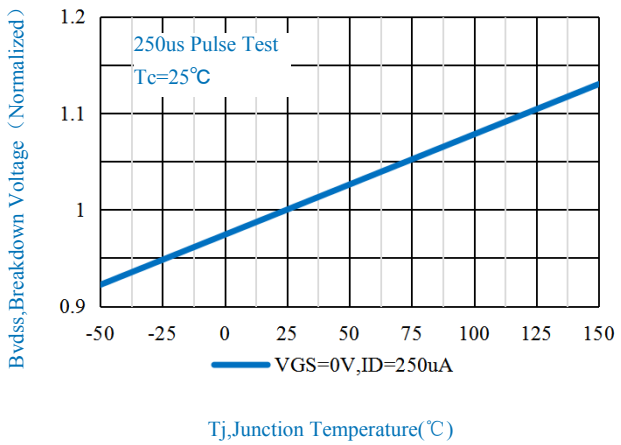

Fig.28-Breakdown Voltage Vs. Junction Temperature

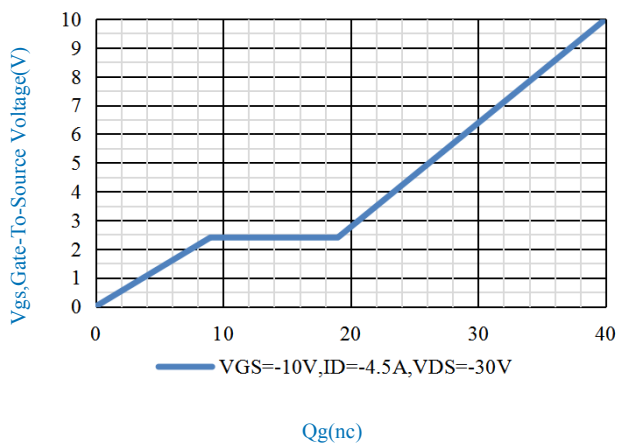

Fig.29-Gate Charge Waveform

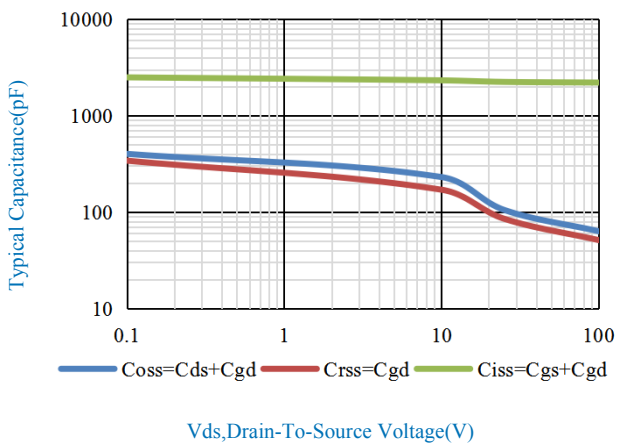

Fig.30-Typical Capacitance Vs. Drain-To-Source Voltage

NTS3915T06S8

N+P-Channel Enhancement Mode Trench Power MOSFET

Pb-Free RoHS COMPLIANT

P-Typical Characteristics Curves

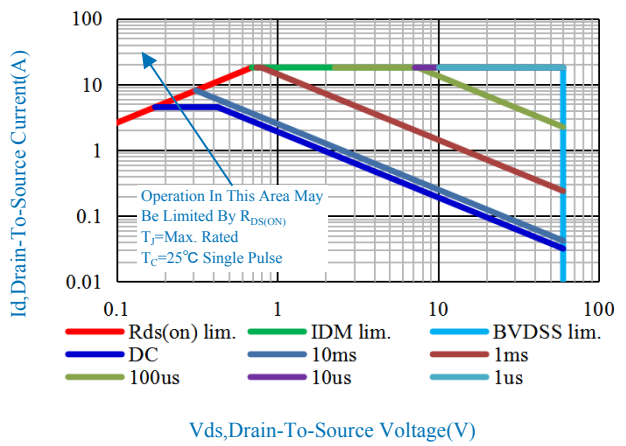

Fig.31-Maximum Safe Operating Area(SOA)

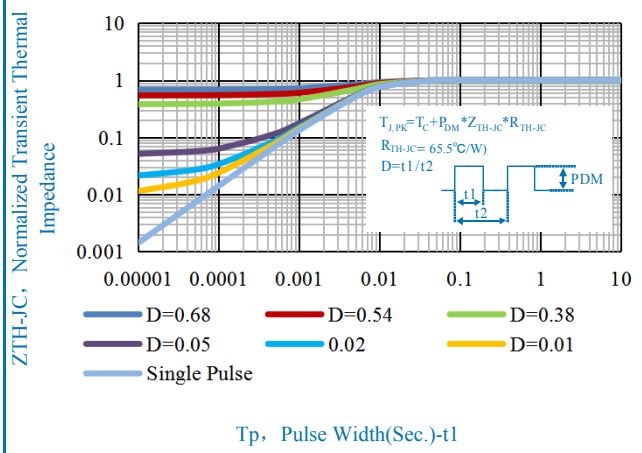

Fig.32- Normalized Maximum Transient Thermal Impedance Vs.Pulse Width

Inductive Load Test Circuit & Waveform

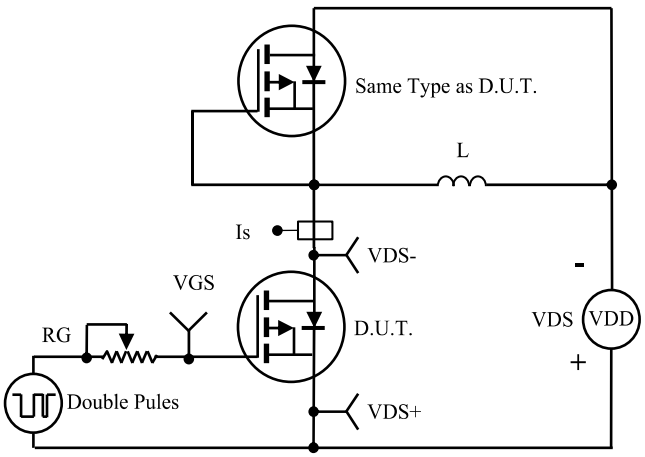

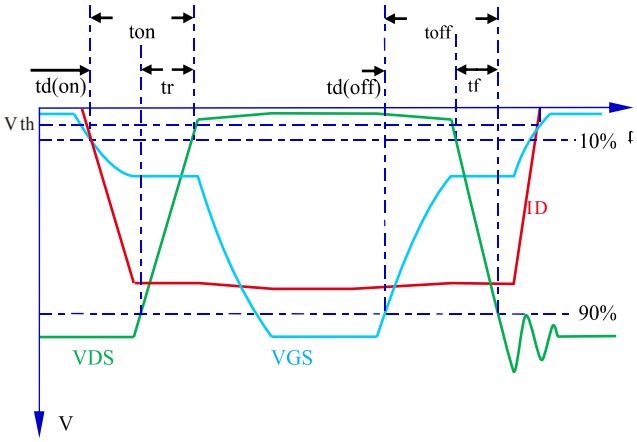

Fig.33- Inductive Switching Test Circuit & Waveform

NTS3915T06S8

N+P-Channel Enhancement Mode Trench Power MOSFET

Pb-Free RoHS COMPLIANT

P-Test Circuit & Waveform

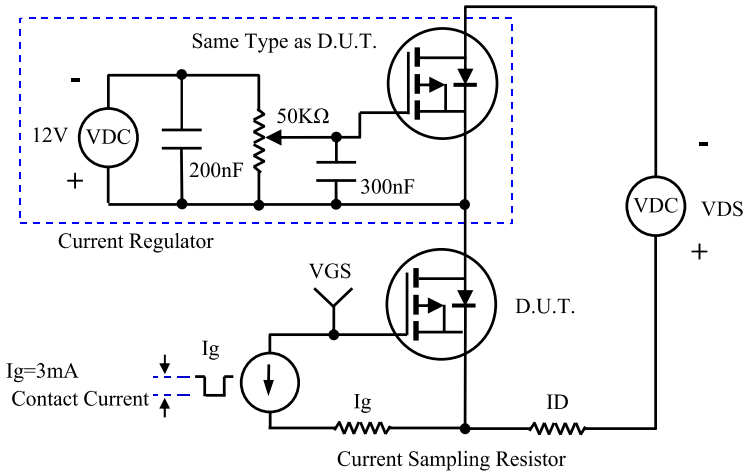

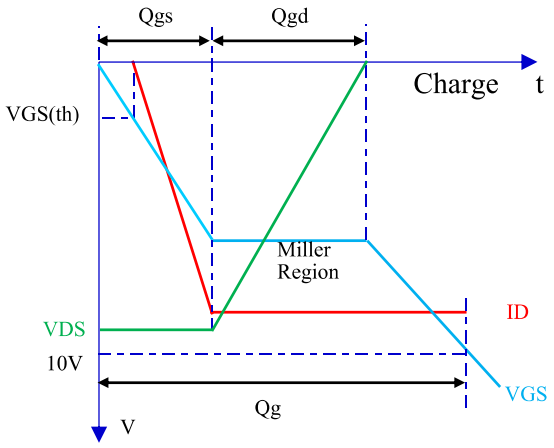

Fig.34-Gate Charge Test Circuit & Waveform

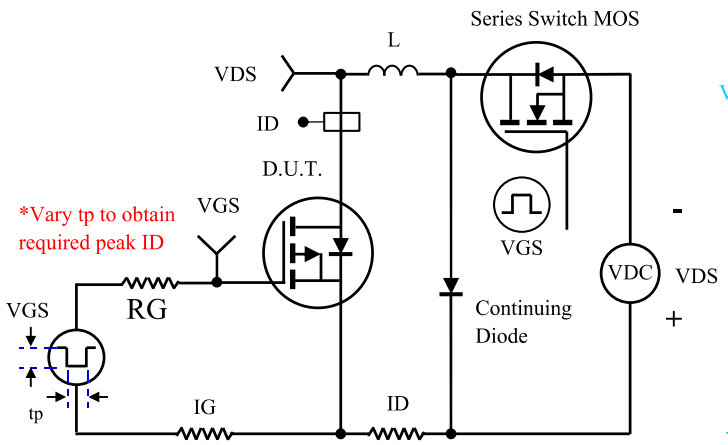

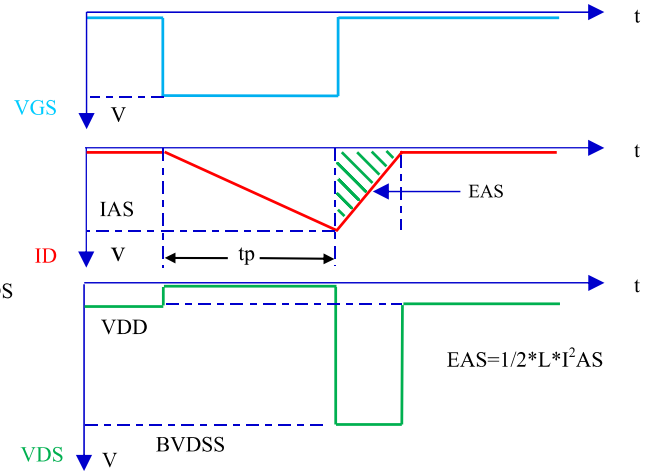

Fig.35- Unclamped Inductive Switching (UIS) Test Circuit & Waveform

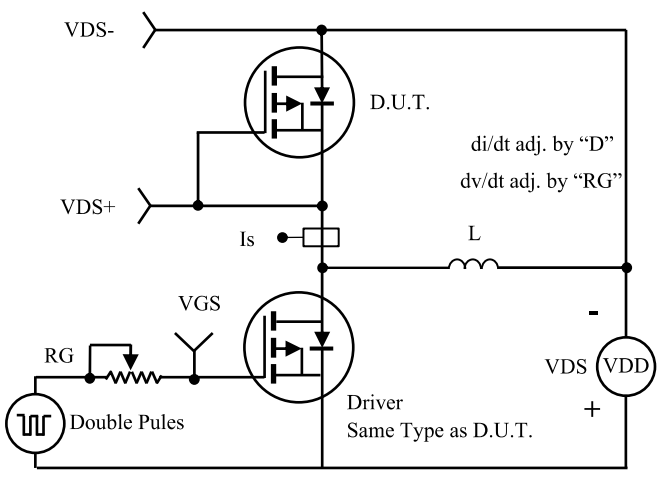

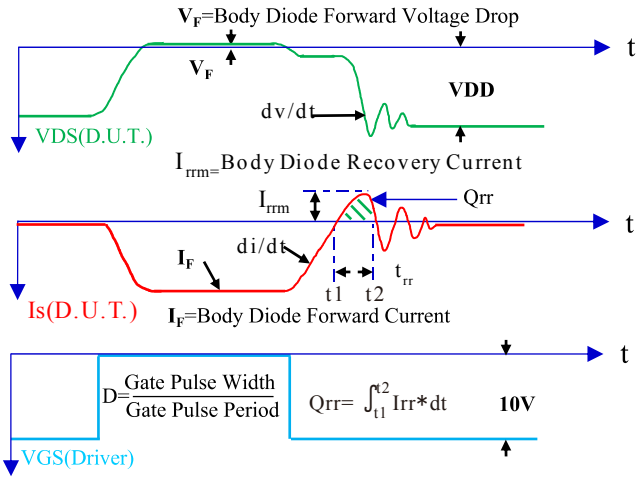

Fig.36- Diode Recovery Test Circuit & Waveform

NTS3915T06S8

N+P-Channel Enhancement Mode Trench Power MOSFET

Pb-Free RoHS COMPLIANT

OUTLINE DRAWINGS

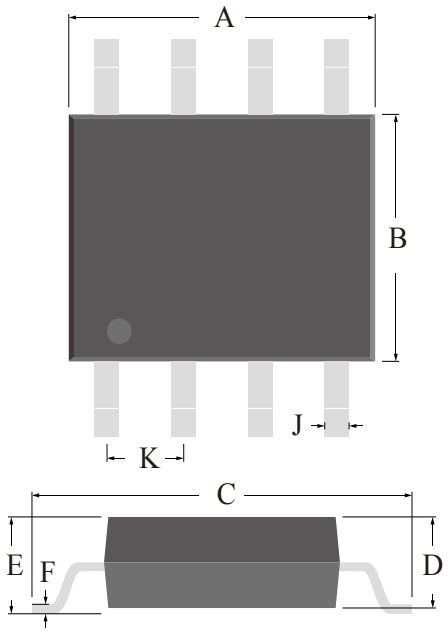

SOP-8

OUTLINE DIMENSIONS						
Dim.	Milimeters			Inches		
	Min.	Typ.	Max.	Min.	Typ.	Max.
A	4.70	-	5.30	0.1850	-	0.2087
B	3.65	-	4.05	0.1437	-	0.1594
C	5.70	-	6.70	0.2244	-	0.2638
D	1.22	-	1.62	0.0480	-	0.0638
E	1.31	-	1.71	0.0516	-	0.0673
F	0.10	-	0.30	0.0039	-	0.0118
J	0.25	-	0.55	0.0098	-	0.0217
K	1.05	-	1.45	0.0413	-	0.0571

RECOMMEDNED LAYOUT DRAWINGS

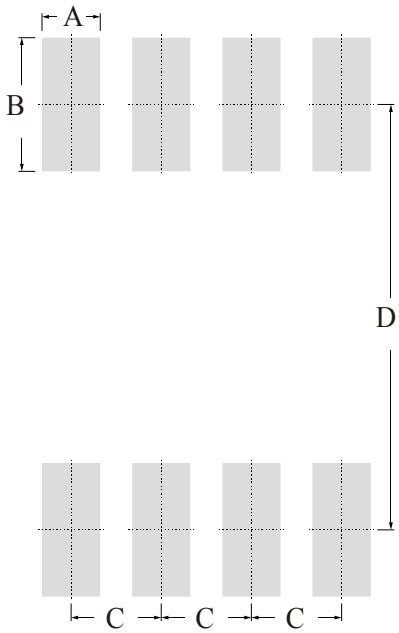

SOP-8

OUTLINE DIMENSIONS						
Dim.	Milimeters			Inches		
	Min.	Typ.	Max.	Min.	Typ.	Max.
A	-	0.80	-	-	0.0315	-
B	-	1.75	-	-	0.0689	-
C	-	1.25	-	-	0.0492	-
D	-	7.35	-	-	0.2894	-

NTS3915T06S8

N+P-Channel Enhancement Mode Trench Power MOSFET

Pb-Free RoHS COMPLIANT

MARKING INFORMATION



MARKING INSTRUCTIONS

NH=Niuhang Trademark

FF=Product Line Code,According To Actual Changes

YWW=Date Code,According To Actual Changes

LLWWF=Inernal Code,According To Actual Changes

NTS3915T06S8=Model

PACKING INFORMATION

Package Type	Package Code	Productor Weight Approx(g/Pcs)	Package Method	Quantity (Pcs/Min. Pack.)	Quantity (Pcs/Inner Box)	Quantity (Pcs/Carton)
SOP-8	P1	0.173	13" Reel	3000	6000	48000

NTS3915T06S8

N+P-Channel Enhancement Mode Trench Power MOSFET

Pb Pb-Free RoHS COMPLIANT

Recommended wave soldering condition

Product	Peak Temperature	Soldering Time
Pb-free devices	260 +0/-5 °C	5 +1/-1 seconds

Recommended temperature profile for IR reflow

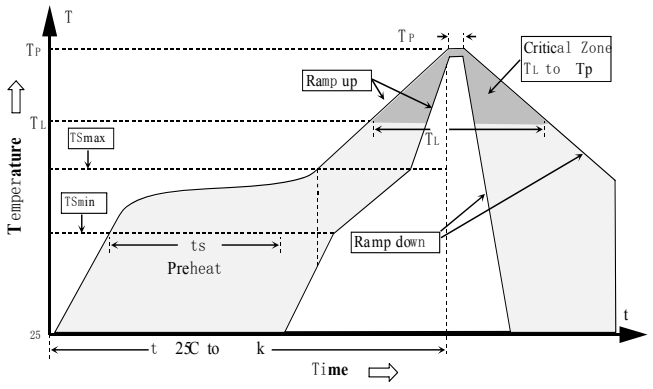

Profile feature	Sn-Pb eutectic Assembly	Pb-free Assembly
Average ramp-up rate (Tsmax to Tp)	3°C/second max.	3°C/second max.
Preheat−Temperature Min (TS min) −Temperature Max (TS max) −Time(ts min to ts max)	100°C 150°C 60-120 seconds	150°C 200°C 60-180 seconds
Time maintained above: −Temperature (TL) − Time (tL)	183°C 60-150 seconds	217°C 60-150 seconds
Peak Temperature(TP)	240 +0/-5 °C	260 +0/-5 °C
Time within 5°C of actual peak temperature (tp)	10-30 seconds	20-40 seconds
Ramp down rate	6°C/second max.	6°C/second max.
Time 25 °C to peak temperature	6 minutes max.	8 minutes max.

Note : All temperatures refer to topside of the package, measured on the package body surface.

Disclaimer

- Reproducing and modifying informatiom of the document is prohibited without permission from Niuhang Electronics Technology Co., LTD
- Niuhang Electronics Technology Co., LTD. reserves the rights to make changes of the content herein the document anytime without notification.
- Niuhang Electronics Technology Co., LTD. disclaims any and all liability arising out of the application or use of any product including damages incidentally and consequentially occurred.
- Niuhang Electronics Technology Co., LTD. does not assume any and all implied warranties,including warranties of fitness for particular purpose,non-infringement and merchantability.
- Applications shown on the herein document are examples of standard use and operation.Customers are responsible in comprehending the suitable use in particular applications.Niuhang Electronics Technology Co., LTD.makes no representation or warranty that such applications will be suitable for the specified use without further testing or modification.
- The products shown herein are not designed and authorized for equipments requiring high level of reliability or relating to human life and for any applications concerning life-saving or life-sustaining,such as medical instruments.transportation equipment,aerospae machinery et cetera.Customers usin or selling these products for use in such applications do so at their own rish and agree to fully indemnify Niuhang Electronics Technology Co., LTD.for any damages resulting resulting from such improper use or sale.
- When the appearance of the product and chip size does not change, in order to product the customer. quality, change the internal structure and the production process Niuhang can not notify

NTS3915T06S8

N+P-Channel Enhancement Mode Trench Power MOSFET

Pb Pb-Free RoHS COMPLIANT

Specification Revision History

Rev.	Date	Changed Items	Pre-Changed Content	Changed Content
A/1	2014-10-20	First Issue		

Blank Below